CAT.5E STP RJ45 MODULE

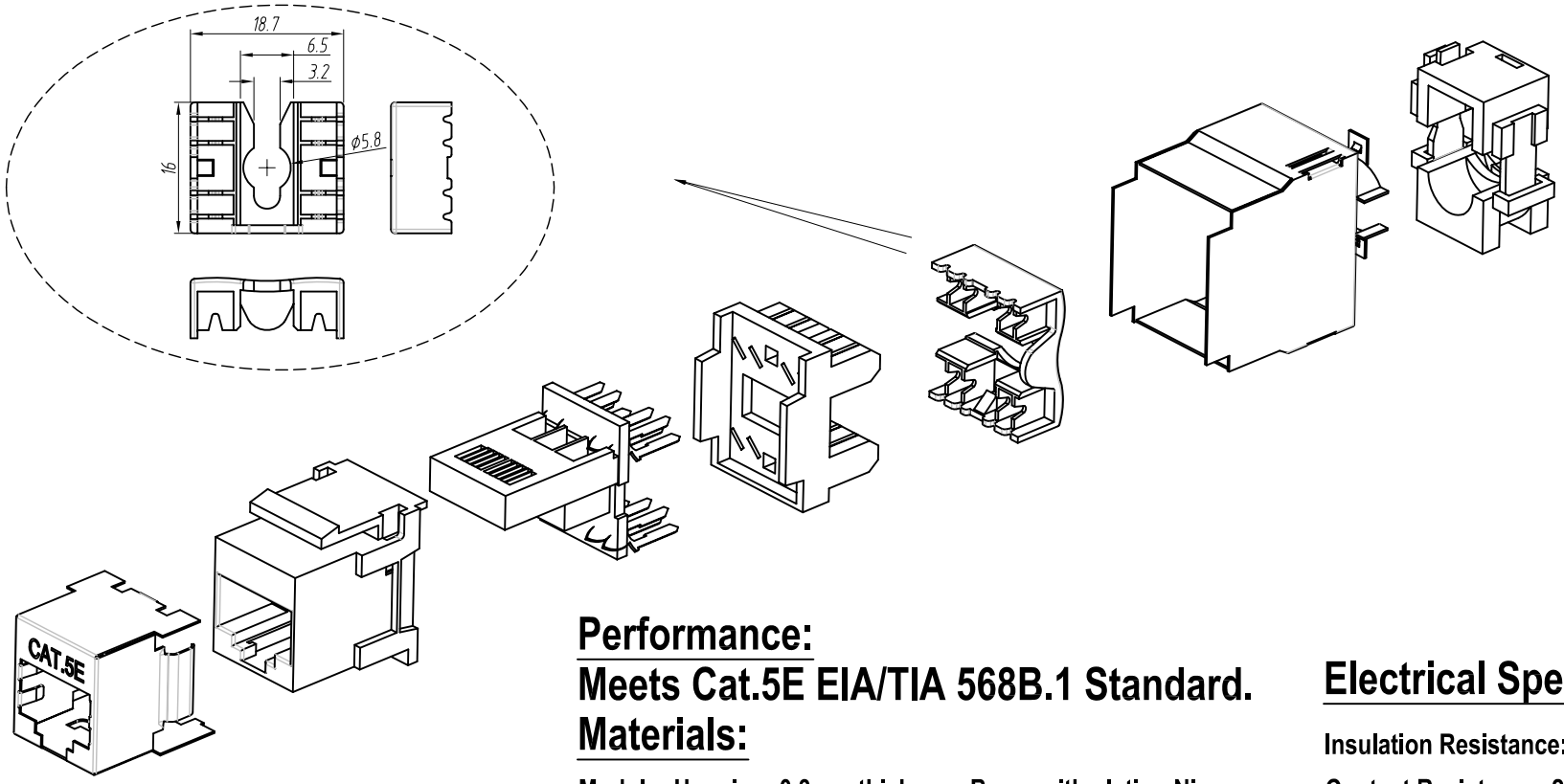

Performance:

Meets Cat.5E EIA/TIA 568B.1 Standard.

Materials:

Modular Housing :0.3mm thickness Brass with plating Ni
Modular Cover : Fireproof PC UL-94V0
Cable Tie : Fireproof PA6 UL-94V0
RJ-45 Jack Insert: Housing-PBT/
8P8C 6 micro inches gold plated
PCB : FR-4/1.6mm UL-94V0
IDC Body : Fireproof PC/ABS UL-94V0
IDC Pin : Bronze & Tinned
Label Color Code : T568 A/B
IDC Terminal: For 22-26 AWG Cable

Electrical Specifications:

Insulation Resistance: 500M ohms (min.)
Contact Resistance: 20m ohms (max.)
Current Rating : 1.5 Amps.
DC Resistance: 0.1 ohms(max.)
Withstanding Voltage : 1000 VAC RMS @ 60Hz/ 1 min.

Mechanical Specifications:

IDC Punch Down Cycle : Over 25 Cycles (min.)
RJ-45 Jack Insertion Cycle : Over 200 Cycles (min.)

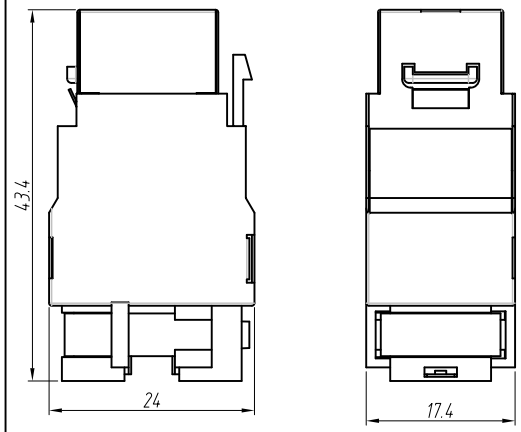

Accessory:

Instruction Sheet

ROHS compliant

DRAW NO:			ITEM NO:	FK-1007S-C5E
	APPR	Johnny Wang	CUSTOMER NO:	E-20051
UNIT: mm	DESIGN	Guo Lili	CUSTOMER:	EFB
SCALE:	TOLERANCE	.±1 .X±0.2 .XX±0.15	DATE:	08. 10. 2006

EFB ELEKTRONIK **EFB-ELEKTRONIK GmbH**